NOTE:
1. ALL DIMENSIONS ARE IN INCHES.

STEEL FLAT WASHER								
ITEM	NOMINAL SIZE		DESCRIPTION	O.D.	I.D.	THICKNESS GA.	THICKNESS IN.	FINISH
03	1/2	0.50	STANDARD	1.38	0.56	12	0.105	ZINC PLATED
04	5/8	0.63	STANDARD	1.75	0.69	10	0.135	ZINC PLATED

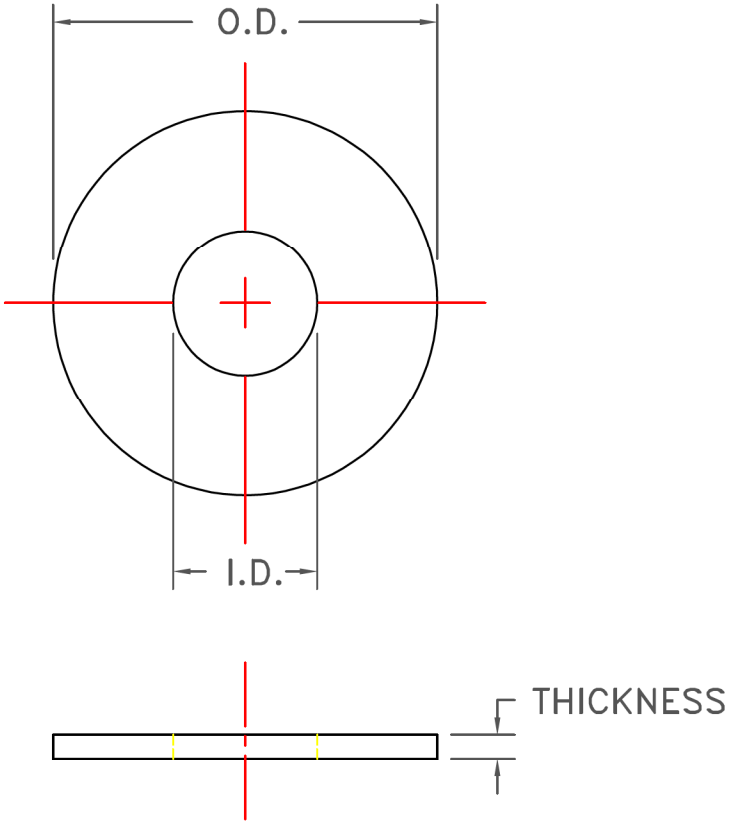

DIMENSION TOLERANCE			TITLE
±			STEEL WASHERS
DIRECTORY:	DATE	DRAWN BY	DRAWING NO.
P-51	08/18/85	MM	51.060-00